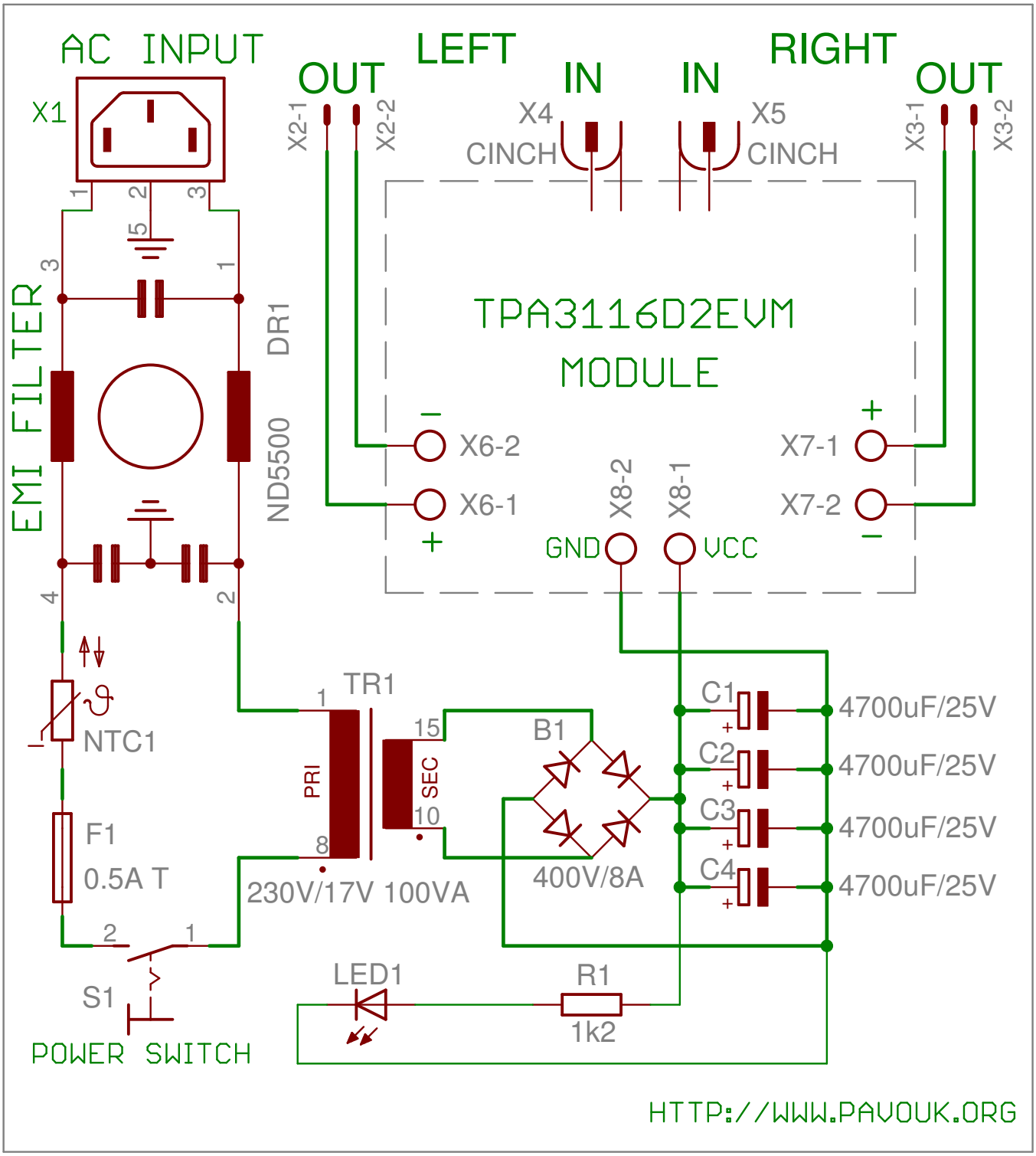
AC INPUT
X1
EMI FILTER
DR1
ND5500
LEFT
OUT
X2-1
X2-2
IN
X4
CINCH
IN
X5
CINCH
RIGHT
OUT
X3-1
X3-2
TPA3116D2EVM
MODULE
X6-2
X6-1
X7-1
X7-2
X8-2
X8-1
GND
VCC
NTC1
F1
0.5A T
S1
POWER SWITCH
TR1
PRI
SEC
230V/17V 100VA
B1
400V/8A
C1
C2
C3
C4
4700uF/25V
4700uF/25V
4700uF/25V
4700uF/25V
LED1
R1
1k2
HTTP://WWW.PAVOUK.ORG