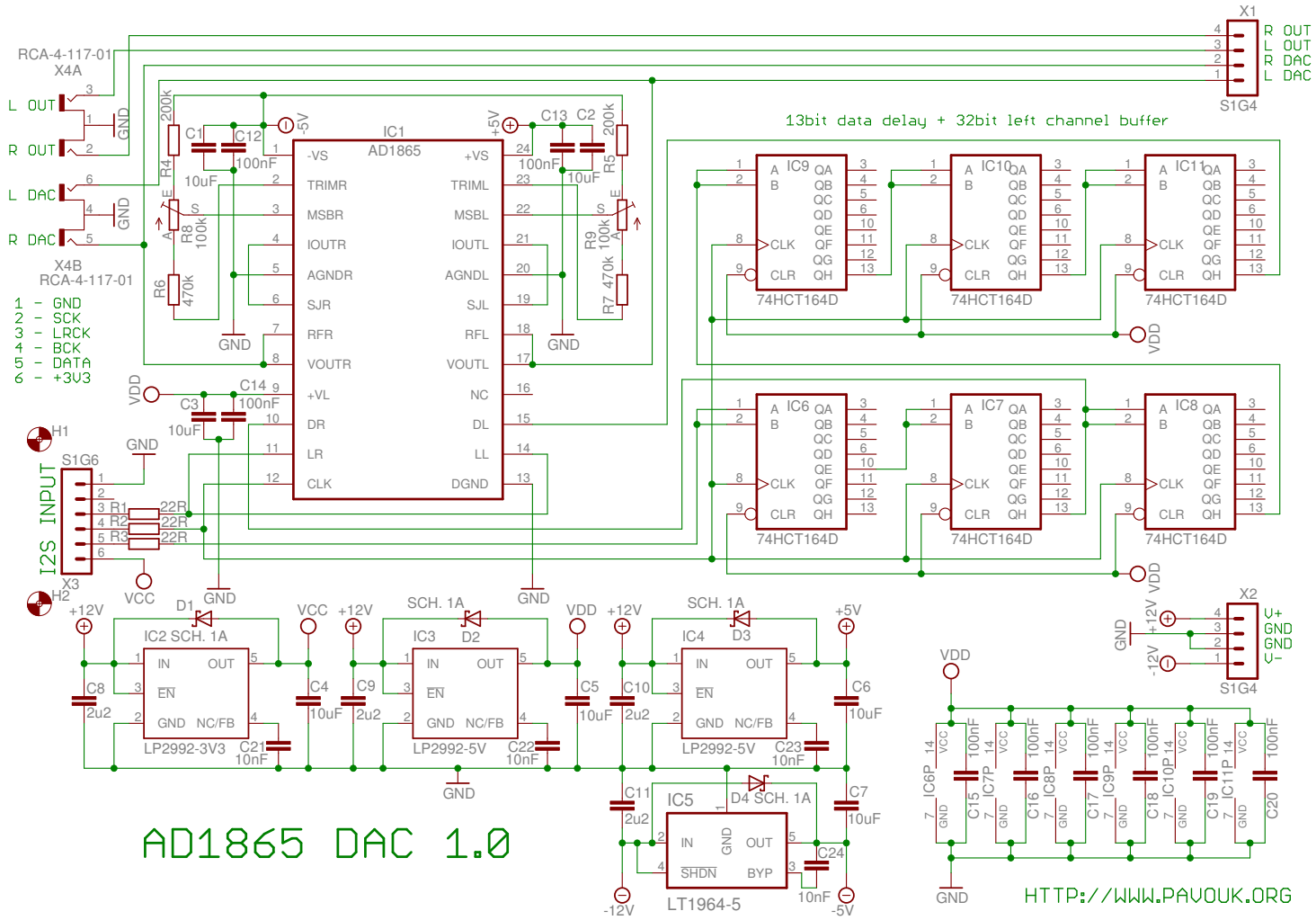

AD1865 DAC 1.0
13bit data delay + 32bit left channel buffer
RCA-4-117-01
X4A
X4B
L OUT
R OUT
L DAC
R DAC
1 - GND
2 - SCK
3 - LRCK
4 - BCK
5 - DATA
6 - +3V3
IC1
AD1865
-VS
+VS
TRIMR
TRIML
MSBR
MSBL
IOUTR
IOUTL
AGNDR
AGNDL
SJR
SJL
RFR
RFL
VOUTR
VOUTL
+VL
NC
DR
DL
LR
LL
CLK
DGND
IC9
IC10
IC11
IC6
IC7
IC8
74HCT164D
IC2 SCH. 1A
IC3
IC4
IC5
LP2992-3V3
LP2992-5V
LT1964-5
SCH. 1A
D1
D2
D3
D4 SCH. 1A
IN
OUT
EN
GND
NC/FB
SHDN
BYP
I2S INPUT
S1G6
X3
H1
H2
X1
S1G4
R OUT
L OUT
R DAC
L DAC
X2
V+
GND
GND
V-
+12V
-12V
+5V
-5V
VDD
VCC
GND
HTTP://WWW.PAVOUK.ORG